GP2Y0A41SK0F

Distance Measuring Sensor Unit
Measuring distance : 4 to 30 cm
Analog output type

■Description

GP2Y0A41SK0F is a distance measuring sensor unit, composed of an integrated combination of PSD (position sensitive detector) , IR-LED (infrared emitting diode) and signal processing circuit.
The variety of the reflectivity of the object, the environmental temperature and the operating duration are not influenced easily to the distance detection because of adopting the triangulation method.
This device outputs the voltage corresponding to the detection distance. So this sensor can also be used as a proximity sensor.

■Agency approvals/Compliance

1. Compliant with RoHS directive (2011/65/EU)

■Applications

1. Cleaning robot
2. Personal robot
3. Sanitary

■Features

1. Distance measuring sensor is united with PSD, infrared LED and signal processing circuit
2. Short measuring cycle (16.5ms)
3. Distance measuring range : 4 to 30 cm
4. Package size (29.5 × 13.0 × 13.5mm)
5. Analog output type

Notice The content of data sheet is subject to change without prior notice.
In the absence of confirmation by device specification sheets, SHARP takes no responsibility for any defects that may occur in equipment using any SHARP devices shown in catalogs, data books, etc. Contact SHARP in order to obtain the latest device specification sheets before using any SHARP device.

Sheet No.: OP13008EN

■Schematic

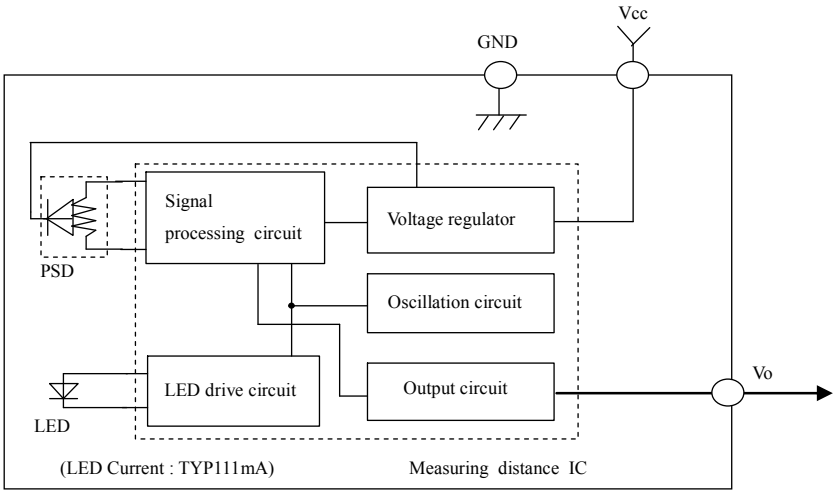

■Outline

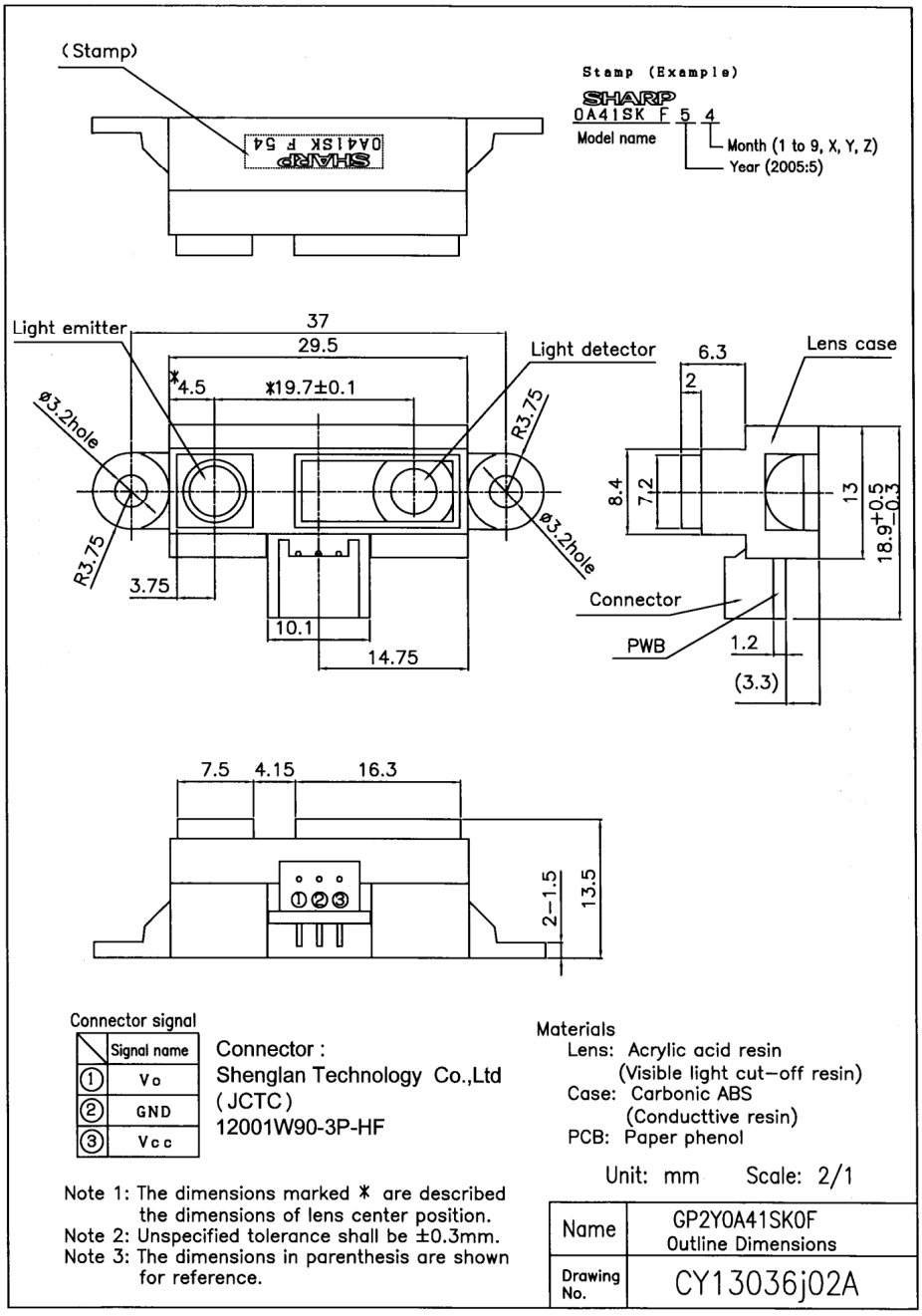

■Absolute maximum ratings

(Ta=25°C, Vcc=5V)

Parameter	Symbol	Ratings	Unit	Remark
Supply voltage	Vcc	-0.3 to +7	V	-
Output terminal voltage	Vo	-0.3 to Vcc+0.3	V	-
Operating temperature	Topr	-10 to +60	°C	-
Storage temperature	Tstg	-40 to +70	°C	-

■Operating supply voltage

Symbol	Rating	Unit	Remark
Vcc	4.5 to 5.5	V	-

■Electro-optical Characteristics

Parameter	Symbol	Conditions	MIN.	TYP.	MAX.	Unit
Measuring distance range	ΔL	(Note 1)	4	-	30	Cm
Output terminal voltage	Vo	L=30cm (Note 1)	0.25	0.4	0.55	V
Output voltage difference	ΔVo	Output change at L change (30cm → 4cm) (Note 1)	1.95	2.25	2.55	V
Average supply current	Icc	L=30cm (Note 1)	-	12	22	mA

※L : Distance to reflective object

(Note 1) Using reflective object : White paper

(Made by Kodak Co., Ltd. gray cards R-27・white face, reflective ratio ; 90%)

■Timing Chart

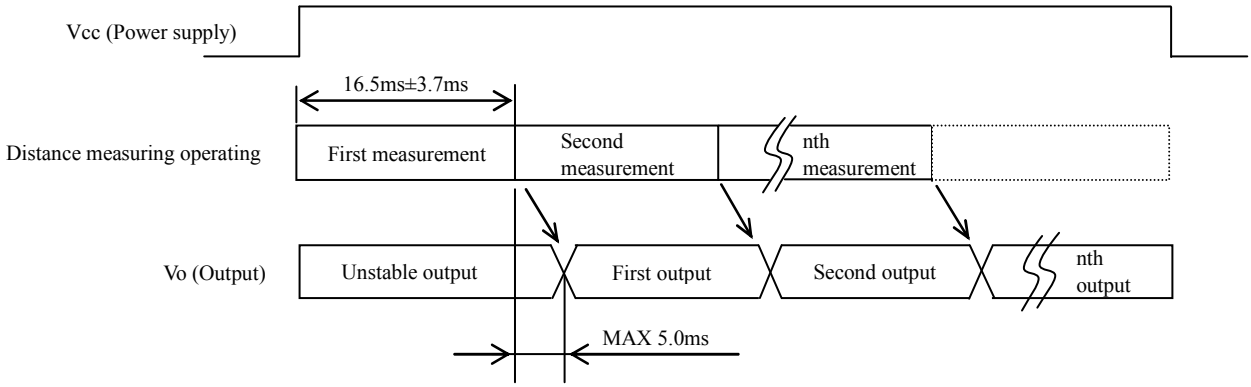

■Supplements

●Example of output distance characteristics

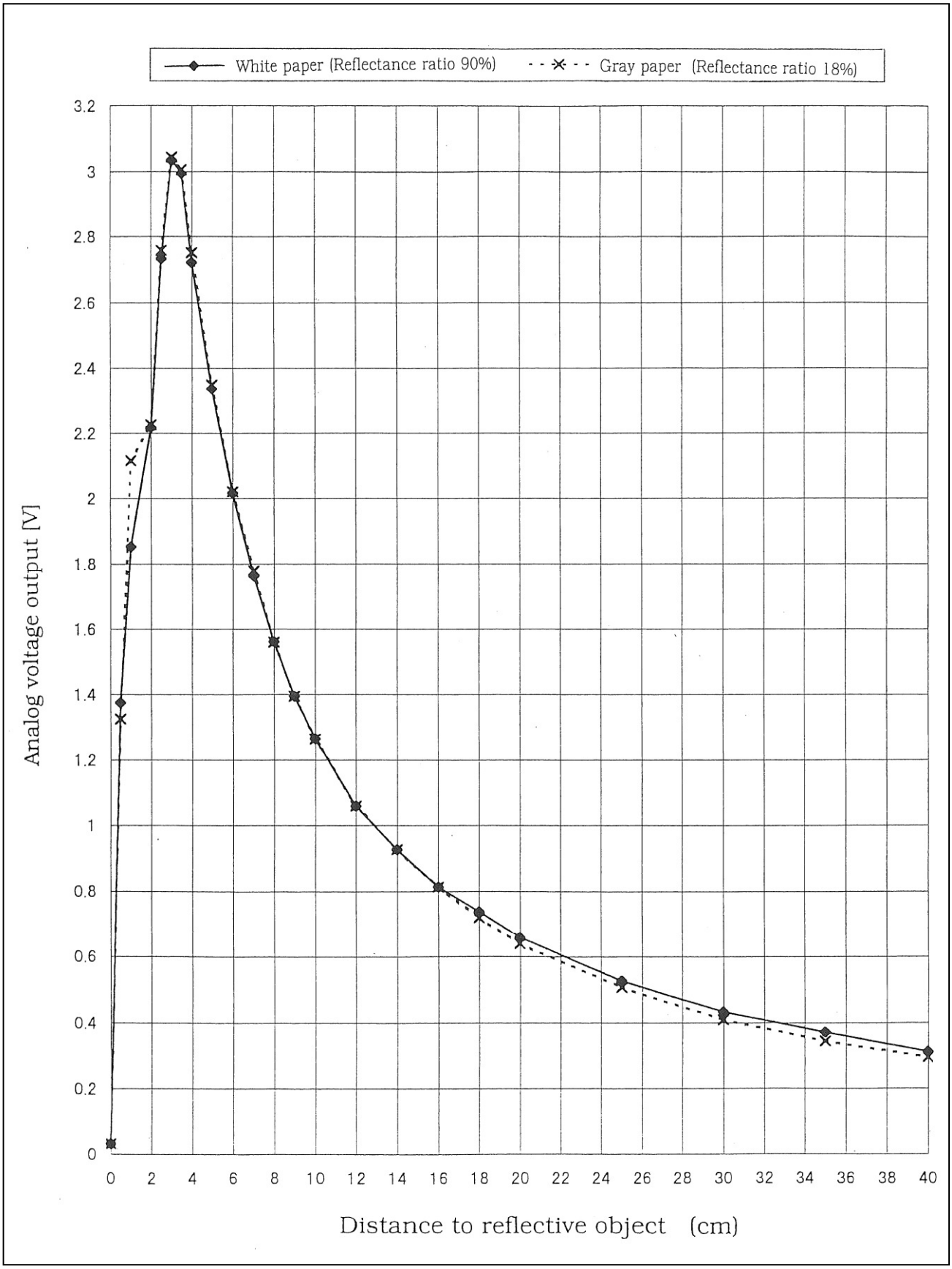

●Example of output distance characteristics with the inverse of distance

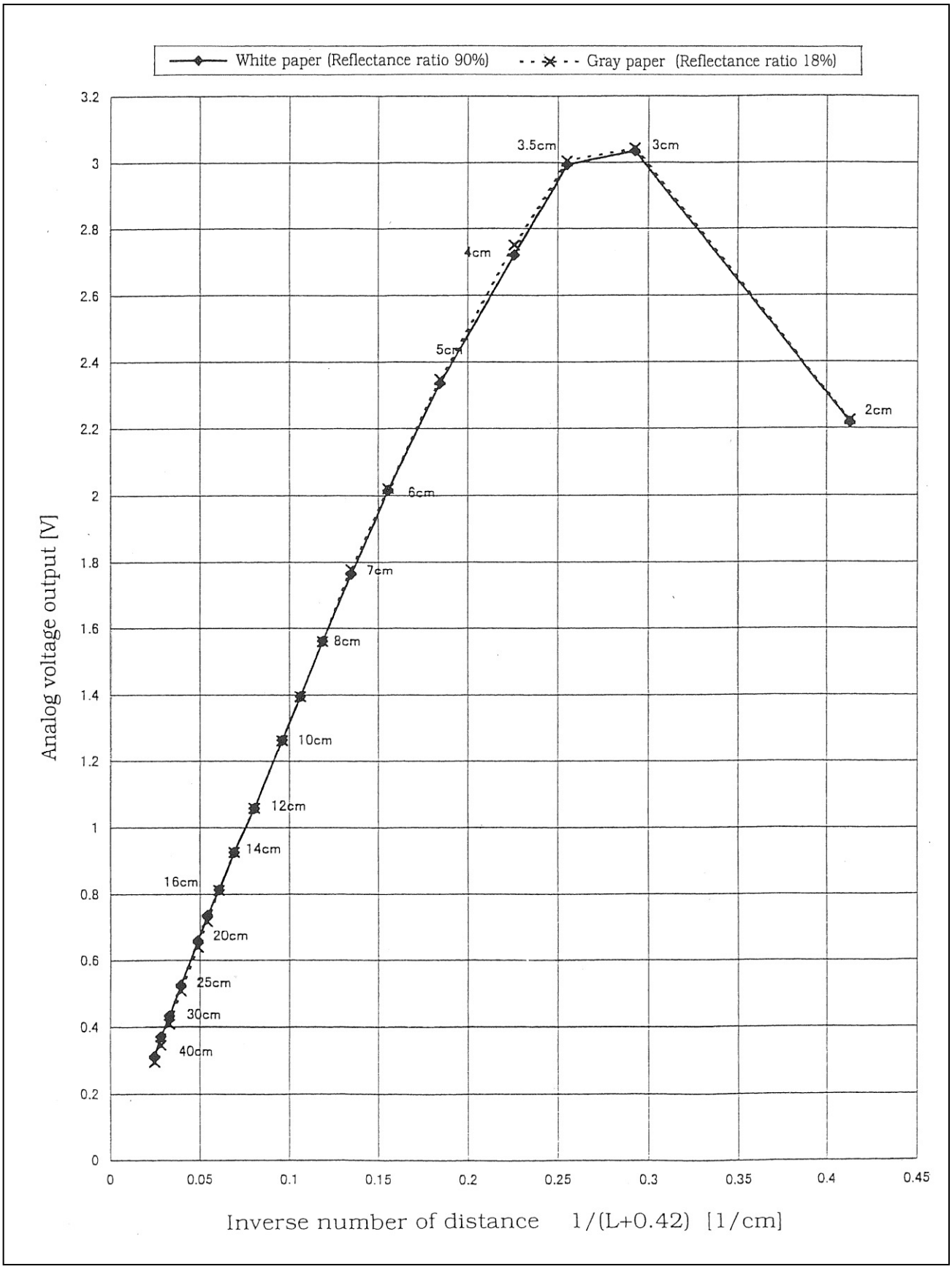

●This product shall not contain the following materials.
Also, the following materials shall not be used in the production process for this product.
Materials for ODS : CFC_S, Halon, Carbon tetrachloride 1.1.1-Trichloroethane (Methyl chloroform)
●Product mass : Approx. 3.6g (TYP)
●This product does not contain the chemical materials regulated by RoHS directive.
(Except for the NOT regulated by RoHS directive.)
●Compliance with each regulation
1) The RoHS directive(2011/65/EU)
This product complies with the RoHS directive(2011/65/EU).
Object substances: mercury, lead, cadmium, hexavalent chromium, polybrominated biphenyls (PBB) and polybrominated diphenyl ethers (PBDE)
2) Content of six substances specified in Management Methods for Control of Pollution Caused by Electronic Information Products Regulation (Chinese : 电子信息产品污染控制管理办法).

Category	Hazardous substances					
	Lead (Pb)	Mercury (Hg)	Cadmium (Cd)	Hexavalent chromium (Cr^{6+})	Polybrominated biphenyls (PBB)	Polybrominated diphenyl ethers (PBDE)
Distance Measuring Sensor	＊	✓	✓	✓	✓	✓

This table is prepared in accordance with the provisions of SJ/T 11364.
✓ : Indicates that said hazardous substance contained in all of the homogeneous materials for this part is below the limit requirement of GB/T 26572
＊ : Indicates that said hazardous substance contained in at least one of the homogeneous materials used for this part is above the limit requirement of GB/T 26572
Lead in glass of electronic components (designated by "＊" in the above table) are exempt from the RoHS directive (2011/65/EU), because there is no effective way to eliminate or substitute them by present scientific technology.

■Notes

[Advice for the optics]

- Lens of this device shall be kept cleanly. There are cases that dust, water or oil and so on deteriorate the characteristics of this device. Please consider in actual application.
- In case that protection is set in front of the emitter and detector portion, the protection cover which has the most efficient transmittance at the emitting wavelength range of LED for this product (λ=870nm±70nm), shall be recommended to use. The face and back of protection cover should be mirror polishing. Also, as there are cases that the characteristics may not be satisfied with according to the distance between the protection cover and this product or the thickness of the protection cover, please use this product after confirming the operation sufficiently in actual application.

[Advice for the characteristics]

- In case that there is an object near to light exits of the sensor between the sensor and the detected object, please use this device after confirming sufficiently what the characteristics of this sensor do not change by the object.
- When the detector surface receive direct light from the sun, tungsten lamp and so on, there are cases that it can not measure the distance exactly. Please consider the design that the detector does not receive direct light from such light source.
- Distance between sensor and mirror reflector can not sometimes measure exactly.
  In case of changing the mounting angle of this product, it may measure the distance exactly.
- In case that reflective object has boundary line clearly, there is cases that distance can not measure exactly.
  At that time, if direction of boundary line and the line between emitter center and detector center parallels, it is possible to decrease deviation of measuring distance.

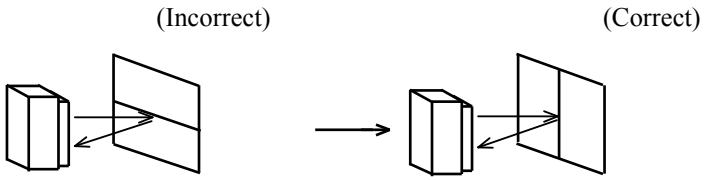

- In order to decrease measuring error by moving direction of object, we recommend to mount the sensor like below drawing.

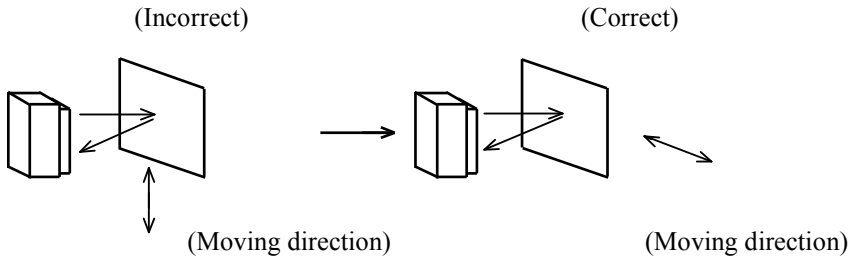

- In order to stabilize power supply line, we recommend to connect a by-pass capacitor of 10μF or more between Vcc and GND near this product.

[Notes on handling]

- Please don't do washing. Washing may deteriorate the characteristics of optical system and so on.
  Please confirm resistance to chemicals under the actual usage since this product has not been designed against for washing.
- There are some possibilities that the sensor inside the case package with lens may be exposed to the excessive mechanical stress. Please be careful not to cause any excessive pressure on the case package with lens and also on the PCB at the assembly and inserting of the set.

■Packing specification

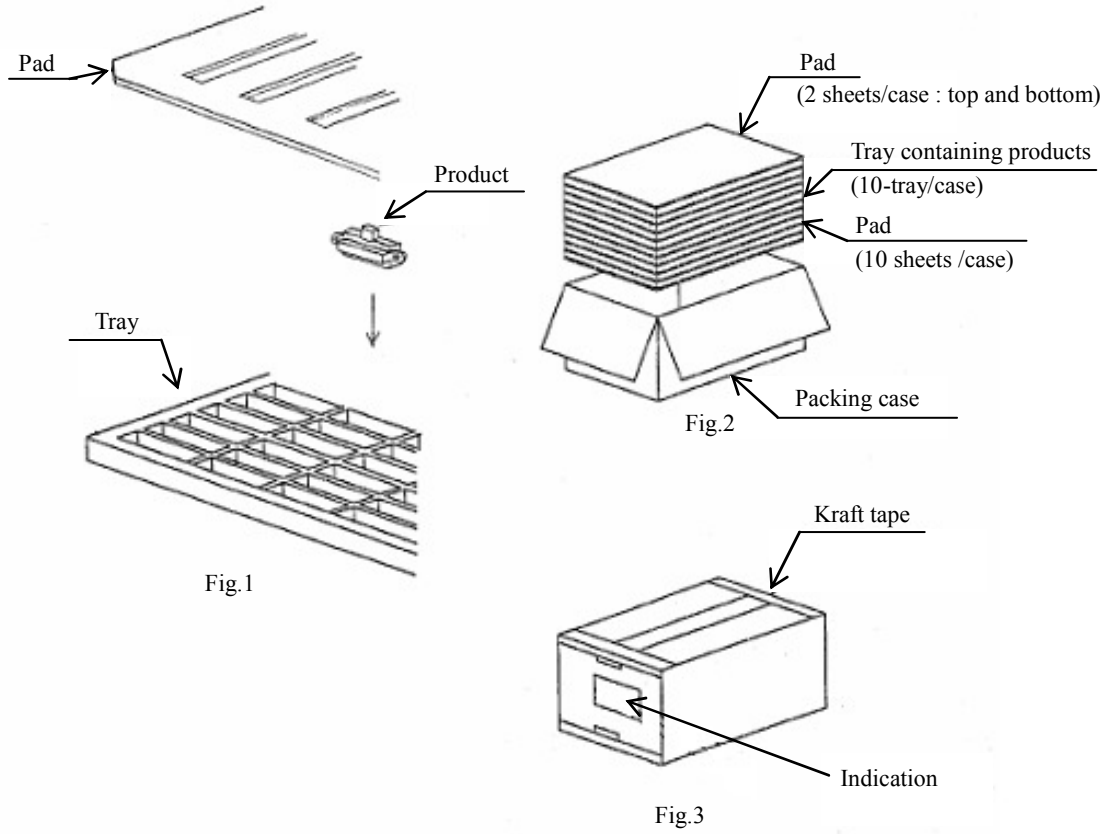

1. Packing numbers
   MAX. 100 pieces per tray
   MAX 1000 pieces per case
2. Arranges in 10 stages of trays containing products into the packing case.
   Put pads on their top and bottom.
   Closes the lid of case and seals with kraft tape.
3. Indication items
   The contents of the carton indication conforms to EIAJ C-3 and the following items are indicated.
   Model No., Internal production control name, Quantity, Packing date, Corporate name, Country of origin

■Important Notices

· The circuit application examples in this publication are provided to explain representative applications of SHARP devices and are not intended to guarantee any circuit design or license any intellectual property rights. SHARP takes no responsibility for any problems related to any intellectual property right of a third party resulting from the use of SHARP's devices.

· Contact SHARP in order to obtain the latest device specification sheets before using any SHARP device. SHARP reserves the right to make changes in the specifications, characteristics, data, materials, structure, and other contents described herein at any time without notice in order to improve design or reliability. Manufacturing locations are also subject to change without notice.

· Observe the following points when using any devices in this publication. SHARP takes no responsibility for damage caused by improper use of the devices which does not meet the conditions and absolute maximum ratings to be used specified in the relevant specification sheet nor meet the following conditions:
(i) The devices in this publication are designed for use in general electronic equipment designs such as:
--- Personal computers
--- Office automation equipment
--- Telecommunication equipment [terminal]
--- Test and measurement equipment
--- Industrial control
--- Audio visual equipment
--- Consumer electronics
(ii) Measures such as fail-safe function and redundant design should be taken to ensure reliability and safety when SHARP devices are used for or in connection with equipment that requires higher reliability such as:
--- Transportation control and safety equipment (i.e., aircraft, trains, automobiles, etc.)
--- Traffic signals
--- Gas leakage sensor breakers
--- Alarm equipment
--- Various safety devices, etc.
(iii) SHARP devices shall not be used for or in connection with equipment that requires an extremely high level of reliability and safety such as:
--- Space applications
--- Telecommunication equipment [trunk lines]
--- Nuclear power control equipment
--- Medical and other life support equipment (e.g., scuba).

· If the SHARP devices listed in this publication fall within the scope of strategic products described in the Foreign Exchange and Foreign Trade Law of Japan, it is necessary to obtain approval to export such SHARP devices.

· This publication is the proprietary product of SHARP and is copyrighted, with all rights reserved. Under the copyright laws, no part of this publication may be reproduced or transmitted in any form or by any means, electronic or mechanical, for any purpose, in whole or in part, without the express written permission of SHARP. Express written permission is also required before any use of this publication may be made by a third party.

· Contact and consult with a SHARP representative if there are any questions about the contents of this publication.